Eico 352 Bar Generator

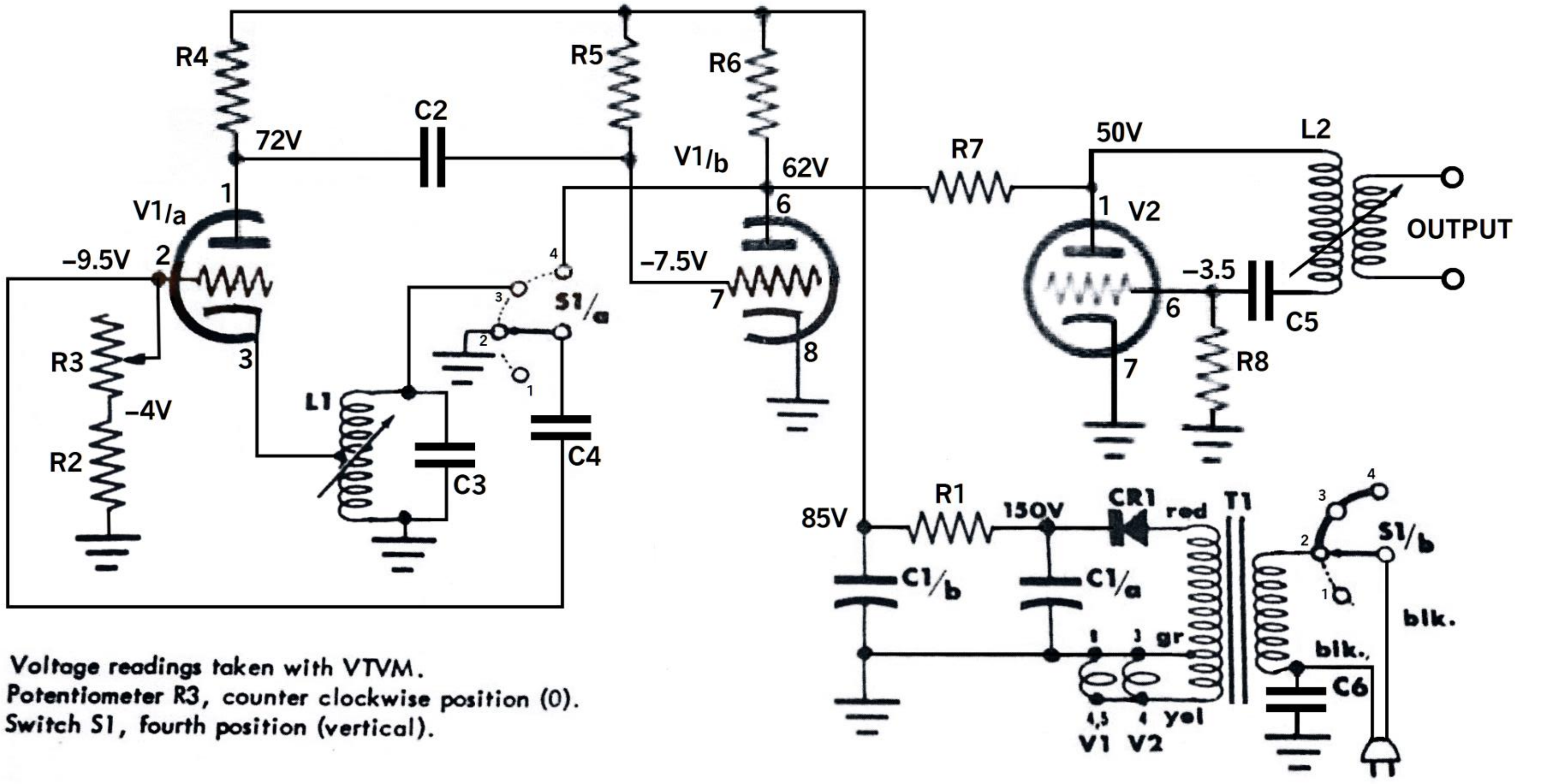

Voltage readings taken with VTVM.
Potentiometer R3, counter clockwise position (0).
Switch S1, fourth position (vertical).

Sym.	Description	Sym.	Description	Sym.	Description
C1	Cap., 2 X 20 mf - 150V	L1	Coil, var., VHF	R6	Res., 4.7KΩ, 1/2 W
C2	Cap., 1000 mmf	L2	Coil, var., RF	R7	Res., 4.7KΩ, 1/2 W
C3	Cap., 470 mmf	R1	Res., 10KΩ, 1/2 W	R8	Res., 33KΩ, 1/2 W
C4	Cap., 270 mmf	R2	Res., 1MΩ, 1/2 W	S1	Switch, 2P-4P.
C5	Cap., 10 mmf	R3	Res., 1MΩ, var.	T1	Power transformer
C6	Cap., .002 mf	R4	Res., 4.7KΩ, 1/2 W	V1	Tube, 12AU7
CR1,	Rectifier, 35 ma	R5	Res., 2.2MΩ, 1/2 W	V2	Tube, 6C4

SELECTOR SWITCH POSITIONS

Pos. 1 Off
Pos. 2 Standby
Pos. 3 Vertical
Pos. 4 Horizontal

MODEL 352 BAR GENERATOR